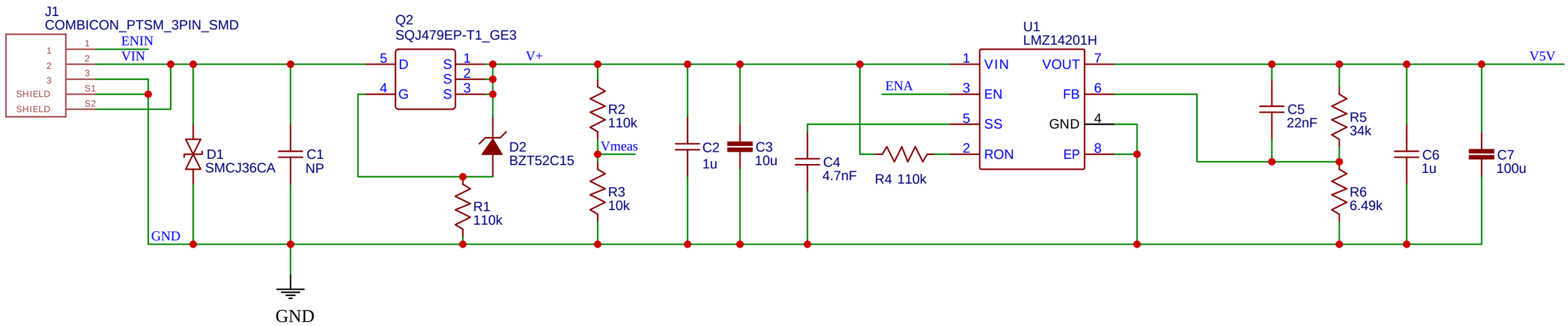

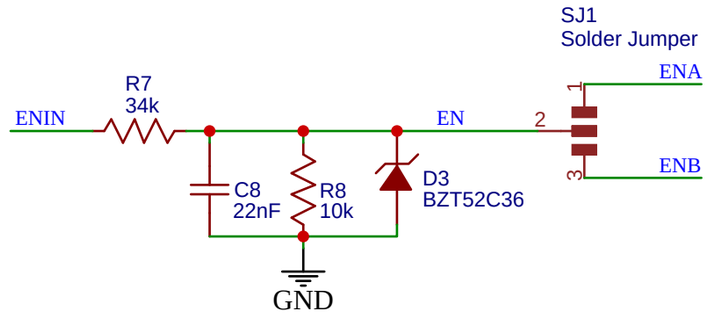

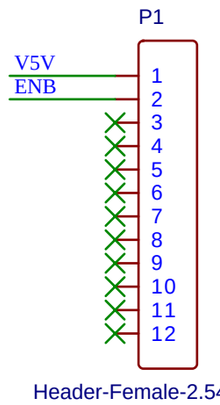

Header-Female-2.54_1x12

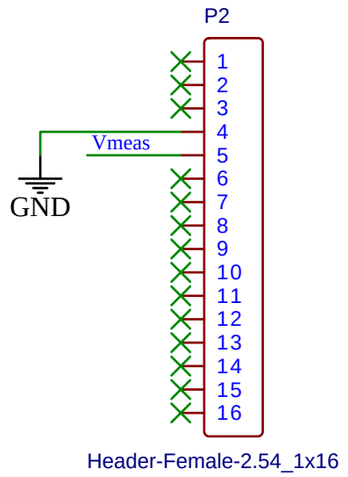

Header-Female-2.54_1x16

NOTES:
1. LMZ1420H - 6-42V 1A RATED

2. ENIN - R7 AND R8 DIVIDER REDUCES VOLTAGE TO ENABLE PINS. LIMITED TO ~3.9V MAX BY D3 ZENER.

ENA IS ACTIVE WHEN ABOVE 1.25V. SHOULD ENABLE ABOVE 6V.

ENB NORMALLY HAS EITHER A 100K PULLUP ON FEATHER BOARDS. SHOULD BE PULLED DOWN BY R8 TO BE NORMALLY OFF.

3. VMEAS = VIN/12. 0-36VIN -> 0-3.3VMEAS

TITLE: PowerWing Schematic	REV: 1.1
Loop Research — Company: Loop Research	Sheet: 1/1
Date: 2019-08-31 Drawn By: RL	